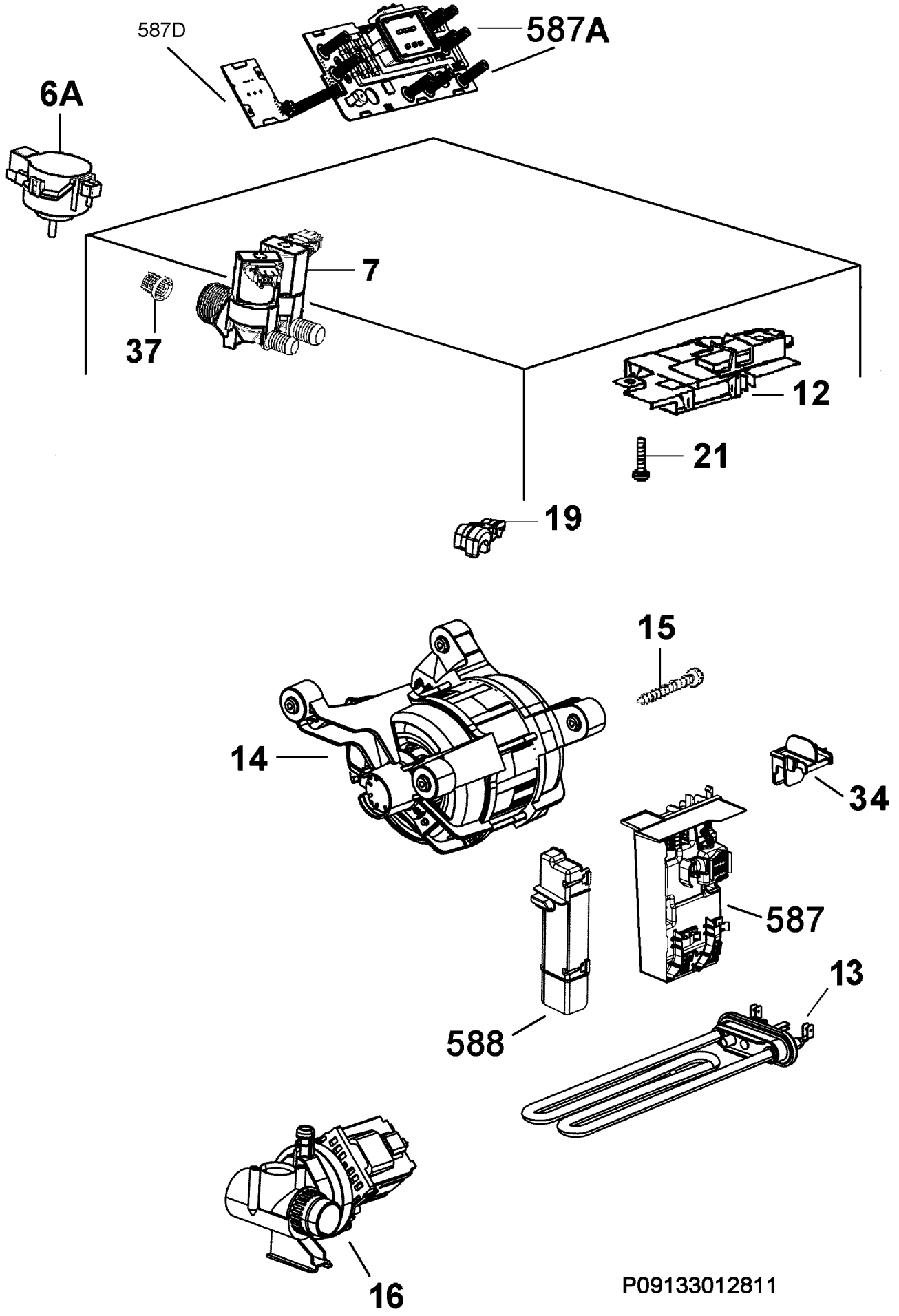
587D
587A
6A
7
37
12
21
19
15
14
34
587
13
588
16
P09133012811