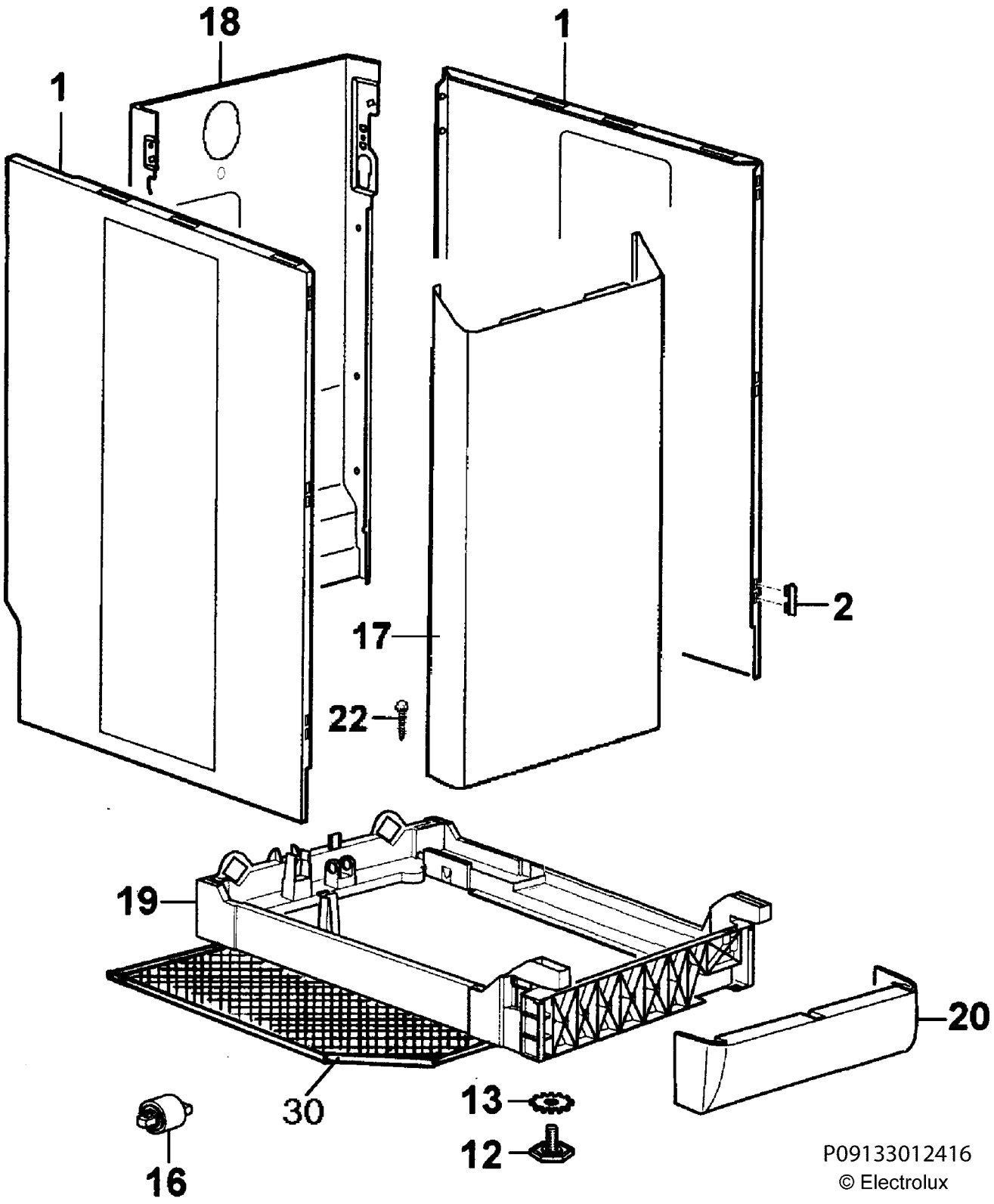
18
1
1
2
17
22
19
20
30
13
12
16
P09133012416
© Electrolux